procedures & products

Brånemark System®

Brånemark System® Zygoma Impression Coping Open Tray ∅4mm

Brånemark System® Zygoma Abutment Screw

English
Deutsch
Español
Français
Italiano
Português

Nobel Biocare®

First from Nobel Biocare.
NobelPerfect™, (NP, RP, WP), NobelDirect™ (NP, RP, WP), Brånemark System®, NobelReplace® and NobelSpeedy® Implants. A complete assortment with ***FDA clearance for Immediate Function*** *in all single, partial and fully edentulous restorations in the mandible and maxilla.*

Nobel Biocare AB and all production units are certified according to the Environmental Management System ISO 14001.

The procedures described herein must only be performed using components and instruments provided by Nobel Biocare.

Nobel Biocare reserves the right to make any necessary alterations to the methods and procedures stated in this manual.

Some products may not be available in all markets. Please contact your local Nobel Biocare office for current product assortment and availability.

Nobel Biocare is in compliance with
ISO 13485:2003 and Council Directive 93/42/EEC
Canadian Medical Devices Regulation

CE 0086

For USA only: *Federal law restricts this device to sale by or on the order of a licensed dentist or physician.*
All products are subject to change without notice.

Table of Contents

English 4
Deutsch 5
Español 6
Français 7
Italiano 8
Português 9

Additional Products for Brånemark System® Zygoma TiUnite® Implants

Update to Brånemark System® Zygoma Procedures and Products manual #15437 GB

- **Brånemark System® Zygoma Impression Coping ∅4 mm:** For taking implant level impressions on Brånemark System® Zygoma TiUnite® Implants.
- **Brånemark System® Zygoma Abutment Screw:** A shorter abutment screw for placing a wider range of abutments and bridges on Brånemark System® Zygoma TiUnite Implants.

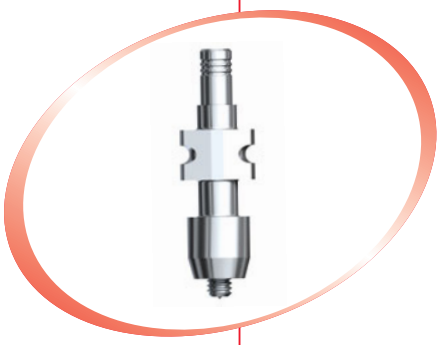

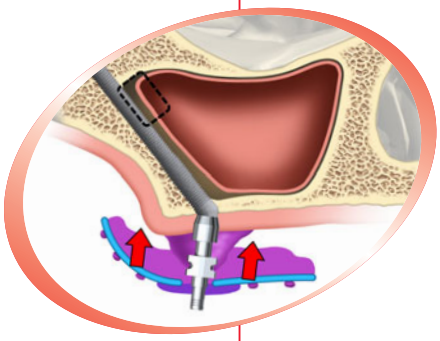

Brånemark System® Zygoma Impression Coping Open Tray ∅4 mm

1. Prior to using these instructions, follow the instructions in the manual for placing a Brånemark System® Zygoma TiUnite® implant up to page 21.
2. Take an implant level impression on Brånemark System® Zygoma TiUnite® Implants, using the Brånemark System® Zygoma Impression Coping Open Tray ∅4 mm.
3. Place the impression coping over the implant and tighten the guide pin using the Unigrip™ Screwdriver.
4. Follow the procedure for taking an open tray impression at implant level in the Procedures and Products manual, NobelEsthetics® #15626 GB.

Brånemark System® Zygoma Abutment Screw

The Brånemark System® Zygoma Abutment Screw is only compatible with the following components:

- Procera® Implant Bridge (Implant Level)
- Procera® Abutment Titanium
- Esthetic Abutment
- Snappy™ Abutment
- GoldAdapt
- Gold Abutment Bar (Implant Level)
- Temporary Abutments

Brånemark System® Zygoma Multi-unit Abutment is delivered with a special Multi-unit Abutment Screw.

1. Before placing the abutment or bridge on the implants, replace the delivered Abutment Screw with the Brånemark System® Zygoma Abutment Screw.
2. Tighten the Abutment Screw to 35 Ncm using a Unigrip™ Screwdriver Machine and Manual Torque Wrench Prosthetic.
3. Place the temporary or final restoration.
4. If further instructions are needed, please follow the procedures in the Procedures and Products manual, NobelEsthetics® #15626 GB.

Article Numbers

33396	Brånemark System® Zygoma Impression Coping Open Tray ∅4 mm
33397	Brånemark System® Zygoma Abutment Screw

Weitere Produkte für Brånemark System® Zygoma TiUnite® Implantate

Aktualisierung des Brånemark System® Zygoma Handbuchs zu Vorgehensweise und Produkten, Artikelnr. 15946 DE

- **Brånemark System® Zygoma Impression Coping (Abformpfosten) ∅4 mm:** Für Abformungen auf Implantatniveau für Brånemark System® Zygoma TiUnite® Implantate.
- **Brånemark System® Zygoma Abutment Screw (Abutmentschraube):** Eine kürzere Abutmentschraube zum Einsetzen verschiedener Abutments und Brücken auf Brånemark System® Zygoma TiUnite® Implantaten.

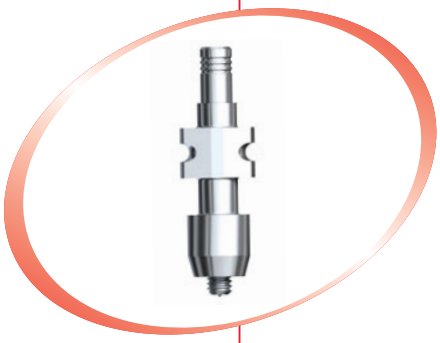

Brånemark System® Zygoma Impression Coping Open Tray (Abformpfosten, offener Löffel) ∅4 mm

1. Bevor Sie den Anweisungen aus diesem Handbuch folgen, lesen Sie bitte zuerst die Anweisungen für die Insertion eines Brånemark System® Zygoma TiUnite® Implantats im Handbuch bis Seite 21.
2. Führen Sie eine Abformung auf Implantatniveau für Brånemark System® Zygoma TiUnite® Implantate durch. Verwenden Sie dafür den Brånemark System® Zygoma Abformpfosten, offener Löffel, ∅4 mm.
3. Platzieren Sie den Abformpfosten auf dem Implantat und ziehen Sie die Schraube manuell mit dem Unigrip™ Schraubendreher fest.
4. Führen Sie die Arbeitsschritte für eine Abformung auf Implantatniveau mit offenem Löffel, wie im NobelEsthetics® Handbuch zu Vorgehensweise und Produkten, Artikelnr. 15630 DE, beschrieben, durch.

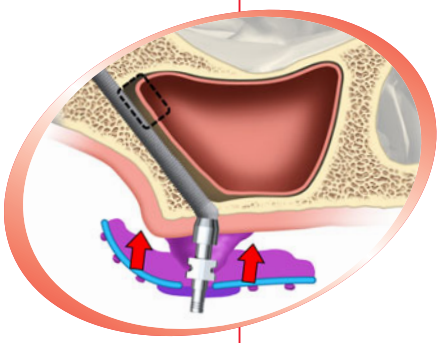

Brånemark System® Zygoma Abutment Screw (Abutmentschraube)

Die Brånemark System® Zygoma Abutmentschraube kann nur mit folgenden Komponenten verwendet werden:

- Procera® Implant Bridge – Implantatniveau
- Procera® Abutment Titanium
- Esthetic Abutment
- Snappy™ Abutment
- GoldAdapt
- Gold Abutment Bar (Gold Abutment für Steg) – Implantatniveau
- Temporary Abutments (Provisorische Abutments)

Das Brånemark System® Zygoma Multi-unit Abutment wird mit einer speziellen Multi-unit Abutmentschraube geliefert.

1. Vor dem Einsetzen des Abutments oder der Brücke auf die Implantate, ersetzen Sie die mitgelieferte Abutmentschraube durch die Brånemark System® Zygoma Abutmentschraube.
2. Ziehen Sie die Abutmentschraube mit der manuellen prothetischen Drehmomentratsche und dem maschinellen Unigrip™ Schraubendreher mit 35 Ncm fest.
3. Setzen Sie die provisorische oder endgültige Versorgung ein.
4. Weitere Informationen und Anweisungen finden Sie im NobelEsthetics® Handbuch zu Vorgehensweise und Produkten, Artikelnr. 15630 DE.

Artikelnummern

33396	Brånemark System® Zygoma Impression Coping Open Tray (Abformpfosten, offener Löffel) ∅4 mm
33397	Brånemark System® Zygoma Abutment Screw (Abutmentschraube)

Productos adicionales para implantes Brånemark System® Zygoma TiUnite®

Actualización del manual de procedimientos y productos Brånemark System® nº15949 ES

- **Cofia de impresión Brånemark System® Zygoma Impression Coping ∅4 mm:** Para tomar impresiones a nivel de implante Brånemark System® Zygoma TiUnite® Implants.
- **Tornillo de pilar Brånemark System® Zygoma Abutment Screw:** Un tornillo de pilar más corto para colocar una mayor variedad de pilares y puentes sobre los implantes Brånemark System® Zygoma TiUnite.

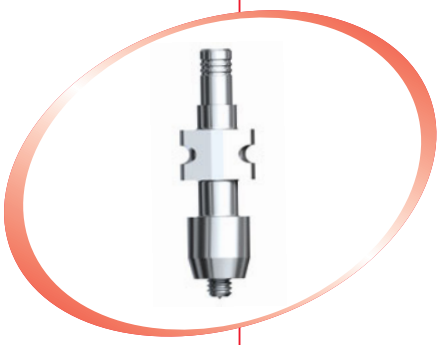

Cofia de impresión de cubeta abierta Brånemark System® Zygoma Impression Coping Open Tray ∅4 mm

1. Antes de iniciar este proceso, siga las instrucciones del manual para colocar el implante Brånemark System® Zygoma TiUnite® hasta la página 21.
2. Tome una impresión a nivel de implante en los implantes Brånemark System® Zygoma TiUnite® utilizando la cofia de impresión de cubeta abierta Brånemark System® Zygoma Impression Coping Open Tray ∅4 mm.
3. Coloque la cofia de impresión sobre el implante y apriete el tornillo de trabajo utilizando el destornillador Unigrip™ Screwdriver.
4. Siga el procedimiento para tomar una impresión de cubeta abierta a nivel de implante en el manual de procedimientos y productos NobelEsthetics® nº15632 ES.

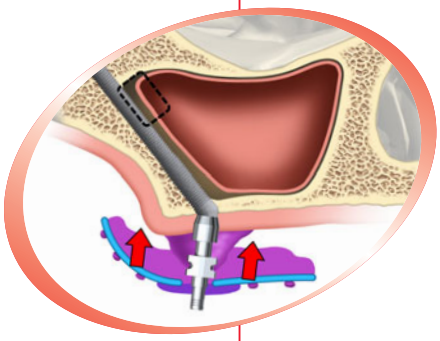

Tornillo de pilar Brånemark System® Zygoma

El tornillo de pilar Brånemark System® Zygoma Abutment Screw sólo es compatible con los siguientes componentes:

- Procera® Implant Bridge (nivel de implante)
- Procera® Abutment Titanium
- Esthetic Abutment
- Snappy™ Abutment
- GoldAdapt
- Gold Abutment Bar (nivel de implante)
- Pilares provisionales

El pilar Brånemark System® Zygoma Multi-unit Abutment se suministra con un tornillo de pilar especial Multi-unit Abutment Screw.

1. Antes de colocar el pilar o el puente sobre los implantes, sustituya el tornillo de pilar Abutment Screw incluido en el envase, por el tornillo de pilar Brånemark System® Zygoma Abutment Screw.
2. Apriete el tornillo de pilar a 35 Ncm utilizando el destornillador mecánico Unigrip™ Screwdriver Machine y la llave de torque manual protésica Manual Torque Wrench Prosthetic.
3. Coloque la restauración provisional o definitiva.
4. Si necesita instrucciones adicionales, siga los procedimientos que se describen en el manual de procedimientos y productos NobelEsthetics® nº15632 ES.

Números de referencia

33396	Brånemark System® Zygoma Impression Coping Open Tray ∅4 mm
33397	Brånemark System® Zygoma Abutment Screw

Autres produits pour implants Brånemark System® Zygoma TiUnite®

Mise à jour du manuel « Protocoles et produits » Brånemark System® Zygoma Réf.15947 FR

- **Transfert d'empreinte Brånemark System® Zygoma ∅4 mm :** Pour la prise d'empreinte sur implants Brånemark System® Zygoma TiUnite®.
- **Vis de pilier Brånemark System® Zygoma :** Une vis de pilier plus courte, pour la pose d'une gamme plus variée de piliers et de bridges sur implants Brånemark System® Zygoma TiUnite®.

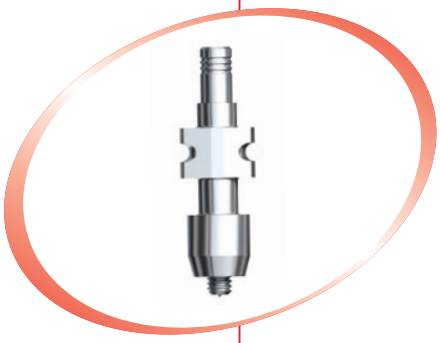

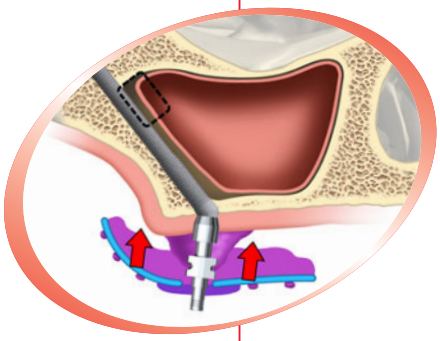

Transfert d'empreinte Brånemark System® Zygoma pour technique du porte-empreinte ouvert ∅4 mm

1. Pour la pose de l'implant Brånemark System® Zygoma TiUnite®, suivre les instructions du manuel jusqu'à la page 21.
2. Effectuer une empreinte sur implant Brånemark System® Zygoma TiUnite® à l'aide du transfert d'empreinte Brånemark System® Zygoma pour technique du porte-empreinte ouvert ∅4 mm.
3. Placer le transfert d'empreinte sur l'implant et visser la vis-guide à l'aide d'un tournevis Unigrip™.
4. Pour l'empreinte sur implant avec porte-empreinte ouvert, suivre la procédure indiquée dans le manuel « Protocoles et produits » NobelEsthetics® Réf.15631 FR.

Vis de pilier Brånemark System® Zygoma

La vis de pilier Brånemark System® Zygoma n'est compatible qu'avec les composants suivants :

- Bridge implantaire Procera® Implant Bridge (sur implant)
- Pilier en titane Procera® Abutment Titanium
- Pilier Esthetic Abutment
- Pilier Snappy™ Abutment
- Pilier GoldAdapt
- Cylindre or pour barre Gold Abutment Bar (sur implant)
- Piliers provisoires Temporary Abutments

Le pilier Brånemark System® Zygoma Multi-unit est livré avec une vis de pilier spéciale (Multi-unit Abutment Screw).

1. Avant de placer le pilier ou le bridge sur les implants, remplacer la vis de pilier fournie par la vis de pilier Brånemark System® Zygoma.
2. Serrer la vis de pilier à 35 Ncm à l'aide d'une clé à torque manuelle de prothèse Manual Torque Wrench Prosthetic et d'un tournevis mécanique Unigrip™.
3. Placer la restauration provisoire ou définitive.
4. Si d'autres instructions sont nécessaires, suivre les procédures indiquées dans le manuel Protocole et produits NobelEsthetics® Réf. 15631 FR

Références produits

33396	Transfert d'empreinte Brånemark System® Zygoma pour technique de porte-empreinte ouvert ∅4 mm
33397	Vis de pilier Brånemark System® Zygoma

Altri prodotti per impianti Brånemark System® Zygoma TiUnite®

Aggiornamento al Manuale delle procedure e dei prodotti Brånemark System® Zygoma #15437 IT

- **Brånemark System® Zygoma Impression Coping ∅4 mm:** per prendere le impronte sugli impianti Brånemark System® Zygoma TiUnite®.
- **Brånemark System® Zygoma Abutment Screw:** una vite dell'abutment più corta per posizionare una più ampia gamma di abutment e ponti sugli impianti Brånemark System® Zygoma TiUnite.

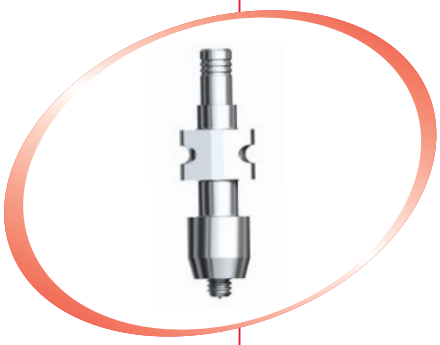

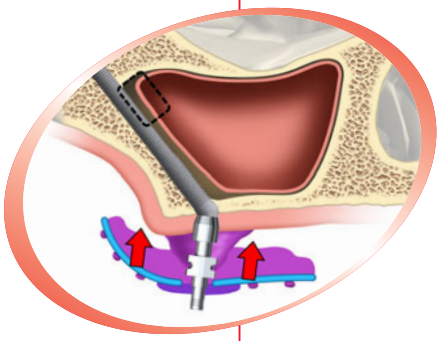

Brånemark System® Zygoma Impression Coping Open Tray ∅4 mm

1. Prima di usare queste istruzioni, seguire le istruzioni nel manuale per il posizionamento di un impianto Brånemark System® Zygoma TiUnite® fino a pagina 21.
2. Prendere un'impronta sugli impianti Brånemark System® Zygoma TiUnite®, utilizzando Brånemark System® Zygoma Impression Coping Open Tray ∅4 mm.
3. Posizionare il transfer d'impronta sull'impianto e serrare il perno guida con Unigrip™ Screwdriver.
4. Seguire la procedura per prendere un'impronta a cucchiaio aperto a livello dell'impianto nel Manuale delle procedure e dei prodotti, NobelEsthetics® #15634 IT.

Brånemark System® Zygoma Abutment Screw

La Brånemark System® Zygoma Abutment Screw è compatibile solamente con i seguenti componenti:

- Procera® Implant Bridge (livello impianto)
- Procera® Abutment Titanium
- Esthetic Abutment
- Snappy™ Abutment
- GoldAdapt
- Gold Abutment Bar (livello impianto)
- Abutment provvisori

Brånemark System® Zygoma Multi-unit Abutment viene consegnato con una speciale Multi-unit Abutment Screw.

1. Prima di posizionare l'abutment o il ponte sugli impianti, sostituire l'Abutment Screw con la Brånemark System® Zygoma Abutment Screw.
2. Serrare le viti degli abutment a 35 Ncm utilizzando Unigrip™ Screwdriver Machine e il Manual Torque Wrench Prosthetic.
3. Posizionare la protesi provvisoria o definitiva.
4. Se sono necessarie ulteriori istruzioni, seguire le procedure descritte nel Manuale delle procedure e dei prodotti, NobelEsthetics® #15634 IT.

Numeri articolo

33396	Brånemark System® Zygoma Impression Coping Open Tray ∅4 mm
33397	Brånemark System® Zygoma Abutment Screw

Produtos adicionais para implantes Brånemark System® Zygoma TiUnite®

Actualização do manual de procedimentos e produtos Brånemark System® Zygoma #15437 PT

- **Brånemark System® Zygoma Impression Coping (coifa de impressão) ∅4 mm:** Para obter impressões ao nível do implante com implantes Brånemark System® Zygoma TiUnite® .
- **Brånemark System® Zygoma Abutment Screw (parafuso do pilar):** Um parafuso de pilar mais curto para colocar uma maior variedade de pilares e pontes sobre implantes Brånemark System® Zygoma TiUnite.

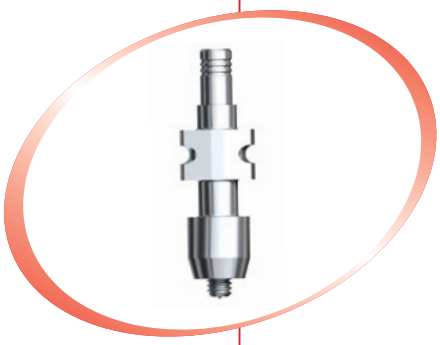

Brånemark System® Zygoma Impression Coping Open Tray (coifa de impressão – moldeira aberta) ∅4 mm

1. Antes de seguir estas instruções, siga as do manual para a colocação de um implante Brånemark System® Zygoma TiUnite® até à página 21.
2. Efectue uma impressão ao nível do implante Brånemark System® Zygoma TiUnite®, utilizando a Brånemark System® Zygoma Impression Coping Open Tray (coifa de impressão de moldeira aberta) ∅4mm.
3. Coloque a coifa de impressão sobre o implante e aperte o parafuso de trabalho com a Chave Unigrip™.
4. Siga o procedimento para a realização de uma impressão com moldeira aberta ao nível do implante conforme descrito no manual de procedimentos e produtos NobelEsthetics® #15633 PT.

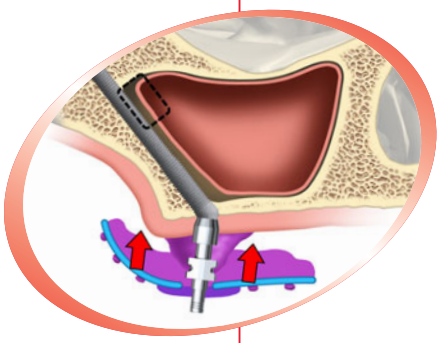

Brånemark System® Zygoma Abutment Screw (parafuso do pilar)

O Brånemark System® Zygoma Abutment Screw (parafuso de pilar) é compatível apenas com os seguintes componentes:

- Procera® Implant Bridge (nível do implante)
- Procera® Abutment Titanium
- Pilar Esthetic Abutment
- Pilar Snappy™ Abutment
- Pilar GoldAdapt
- Gold Abutment Bar (pilar em ouro para barra – nível do implante)
- Pilares provisórios

O pilar Brånemark System® Zygoma Multi-unit Abutment é fornecido com um parafuso especial para pilares Multi-unit.

1. Antes de colocar o pilar ou a ponte sobre os implantes, substitua o parafuso de pilar fornecido pelo parafuso Brånemark System® Zygoma Abutment Screw.
2. Aperte o parafuso do pilar a 35 Ncm utilizando a Chave de Torque Manual Protética e a chave Unigrip™ mecânica.
3. Coloque a restauração provisória ou definitiva.
4. Se necessitar de instruções adicionais, siga os procedimentos descritos no manual de procedimentos e produtos NobelEsthetics® #15633 PT.

Número de referência

33396	Brånemark System® Zygoma Impression Coping Open Tray ∅4 mm
33397	Brånemark System® Zygoma Abutment Screw

Customer Service worldwide.

NORTH AMERICA

CANADA
Nobel Biocare Canada
Phone: +1 905 762 3500
Cust. support:
+1 800 939 9394

USA
Nobel Biocare USA
Phone: +1 714 282 4800
Cust. support:
+1 800 322 5001

EUROPE AND RUSSIA

AUSTRIA
Nobel Biocare Austria
Phone: +43 1 892 89 90

BELGIUM
Nobel Biocare Belgium
Phone: +32 2 467 41 70

DENMARK
Nobel Biocare Denmark
Phone: +45 39 40 48 46

FINLAND
Nobel Biocare Finland
Phone: +358 9 343 69 70

FRANCE
Nobel Biocare France
Phone: +33 1 49 20 00 30

GERMANY
Nobel Biocare Germany
Phone: +49 221 500 85 590

HUNGARY
Nobel Biocare Hungary
Phone: +36 1 279 33 79

IRELAND
Nobel Biocare Ireland
Phone: toll free 1800 677 306

ITALY
Nobel Biocare Italy
Phone: +39 039 683 61
Cust. support:
toll free 800 53 93 28

LITHUANIA
Nobel Biocare Lithuania
Phone: +370 5 268 3448

NETHERLANDS
Nobel Biocare Netherlands
Phone: +31 30 635 4949

NORWAY
Nobel Biocare Norway
Phone: +47 64 95 75 55

POLAND
Nobel Biocare Poland
Phone: +48 22 549 93 50
Cust. support:
+48 22 549 93 52

PORTUGAL
Nobel Biocare Portugal
Phone: +351 22 374 73 50
Cust. support:
toll free 800 300 100

RUSSIA
Nobel Biocare Russia
Phone: +7 495 974 77 55
Cust. support:
toll free 8 800 250 77 55

SPAIN
Nobel Biocare Spain
Phone: +34 93 508 8800
Cust. support:
toll free 900 850 008

SWEDEN
Nobel Biocare Sweden
Phone: +46 31 335 49 00
Cust. support: +46 31 335 49 10

SWITZERLAND
Nobel Biocare Switzerland
Phone: +41 43 211 53 20

UNITED KINGDOM
Nobel Biocare UK
Phone: +44 208 756 3300

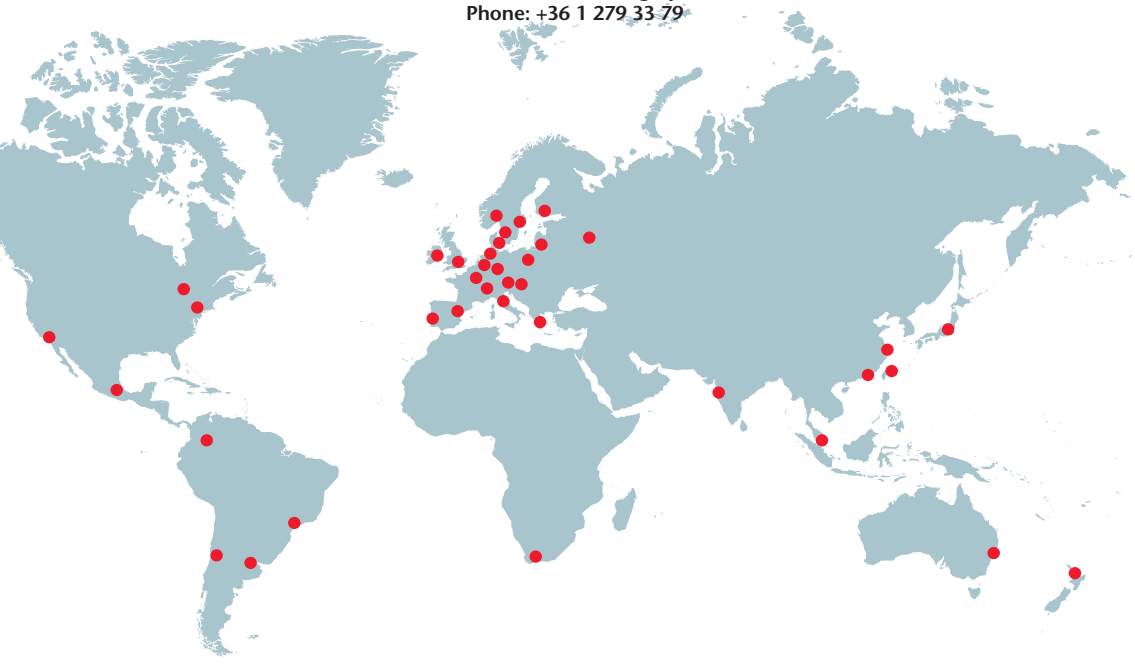

ASIA PACIFIC

AUSTRALIA
Nobel Biocare Australia
Phone: +61 2 8064 5100
Cust. support:
toll free 1800 804 597

CHINA
Nobel Biocare China
Phone: +86 21 5206 6655
Cust. support:
+86 21 5206 0974

HONG KONG
Nobel Biocare Hong Kong
Phone: +852 2845 1266
Cust. support: +852 2823 8926

INDIA
Nobel Biocare India
Phone: +91 22 6751 9999
Cust. support:
toll free 1 800 22 9998

JAPAN
Nobel Biocare Japan
Phone: +81 3 6717 6191

NEW ZEALAND
Nobel Biocare New Zealand
Phone: +61 2 8064 5100
Cust. support:
toll free 0800 441 657

SINGAPORE
Nobel Biocare Singapore
Phone: +65 6737 7967
Cust. support: +65 6737 7967

TAIWAN
Nobel Biocare Taiwan
Phone: +886 2 2793 9933

CENTRAL/SOUTH AMERICA DISTRIBUTOR MARKETS

CHILE
ECM Ingeniera S.A.
Phone: +56 2 655 5500
Cust. support: +56 2 655 5502

COLOMBIA
Hospimedics S.A.
Phone: +57 1 620 9410
Cust. support: +57 1 620 9410

BRAZIL
Nobel Biocare Brazil
Phone: +55 11 5102 7000
Cust. support: 0800 169 996

MEXICO
Nobel Biocare Mexico
Phone: +52 55 524 974 60

AFRICA

SOUTH AFRICA
Nobel Biocare South Africa
Phone: +27 11 802 0112

EUROPE AND MIDDLE EAST DISTRIBUTOR MARKETS

BAHRAIN, BULGARIA, CROATIA, CYPRUS, CZECH REPUBLIC, GREECE, IRAN, IRAQ, ISRAEL, JORDAN, KUWAIT, LEBANON, MALTA, OMAN, ROMANIA, SAUDI ARABIA, SERBIA, SLOVAKIA, SLOVENIA, TURKEY, UNITED ARAB EMIRATES, QATAR

Phone: +48 22 549 93 56
Cust. support: +48 22 549 93 55

www.nobelbiocare.com

Nobel Biocare®

10152 F Lot "ML 1304" Printed in Sweden. © Nobel Biocare Services AG, 2011.
Nobel Biocare, the Nobel Biocare logotype and all other trademarks used in this document are, if nothing else is stated or is evident from the context in a certain case, trademarks of the Nobel Biocare group. Product images are not necessarily to scale.